CORIO

Granite sink with tap, 1-bowl with drainer

Product code: ZRCB2113
EAN: 5907650812319
Color: graphite
Warranty [years]: 18

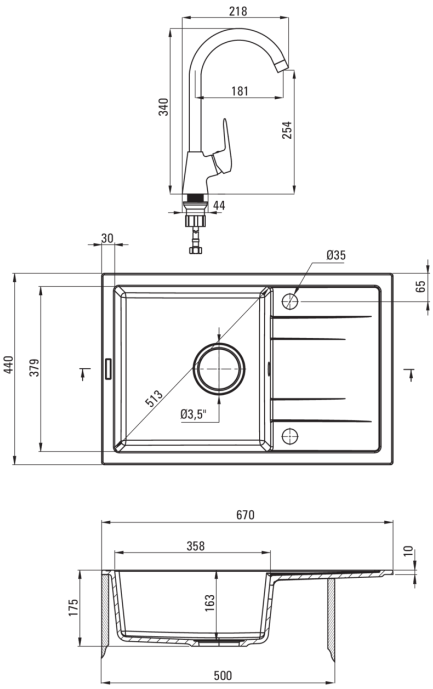

Sink

Finish	graphite
Surface type	matte
Material	granite
Installation method	inset
Number of bowls	1
Minimum cabinet width [mm]	500
Width [mm]	440
Length [mm]	670
Height [mm]	175
Bowl depth [mm]	163
Cut-out length [mm]	650
Cut-out width [mm]	420
Reversible	Yes
Equipped with accessories	Yes
Number of holes	2
Number of pre-drilled holes	0
Hydrophobicity	Yes

Sink waste kit

Finish	steel
Plug type	manual
Low siphon/ space saver	Yes
Possibility to connect a dishwasher/ washing machine	Yes

Mixer

Finish	nero
Mixer type	mixer, single-handle
Installation method	standing
Acoustic group [db]	II (20 < x ≤ 30)

Mixer cartridge

Ceramic cartridge size	35 mm

Spout

Spout type	swivel

Aerator

Aerator type	honeycomb
Aerator size	M22

Connecting hose

Length [mm]	350
Installation thread	3/8"
Connection thread	M10