ZORBA

Granite sink with tap, 1-bowl with drainer

Product code: ZQZVN113
EAN: 5907650876830
Color: nero
Warranty [years]: 18

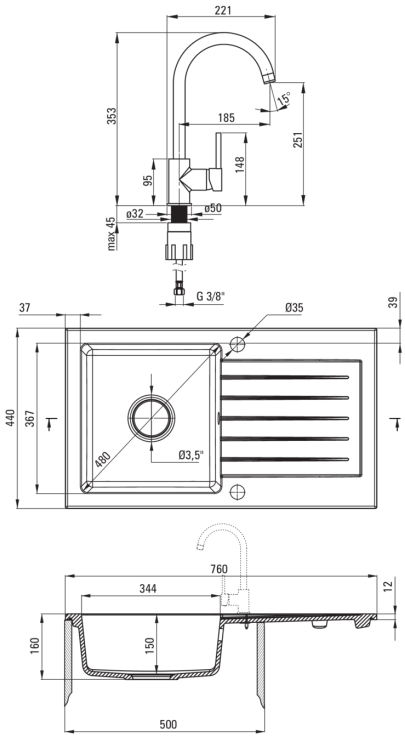

Sink

Finish	nero
Surface type	matte
Material	granite
Installation method	inset
Number of bowls	1
Minimum cabinet width [mm]	500
Width [mm]	440
Length [mm]	760
Height [mm]	160
Bowl depth [mm]	150
Cut-out length [mm]	740
Cut-out width [mm]	420
Reversible	Yes
Equipped with accessories	Yes
Number of holes	2
Number of pre-drilled holes	0
Hydrophobicity	Yes

Sink waste kit

Finish	steel
Plug type	automatic
Low siphon/ space saver	Yes
Possibility to connect a dishwasher/ washing machine	Yes

Mixer

Finish	black
Mixer type	single-handle, mixer
Installation method	standing
Flow class [l/min]	Z - 4-9 l/min
Acoustic group [db]	I (x ≤ 20)

Mixer cartridge

Ceramic cartridge size	35 mm

Spout

Spout type	swivel
Mixer spout range [mm]	185

Aerator

Aerator type	honeycomb
Aerator size	M22

Connecting hose

Length [mm]	450
Installation thread	3/8"
Connection thread	M10