EVORA

Granite sink, 1-bowl with drainer

Product code: ZQJ_7113
EAN: 5908212054291
Color: sand
Warranty [years]: 18

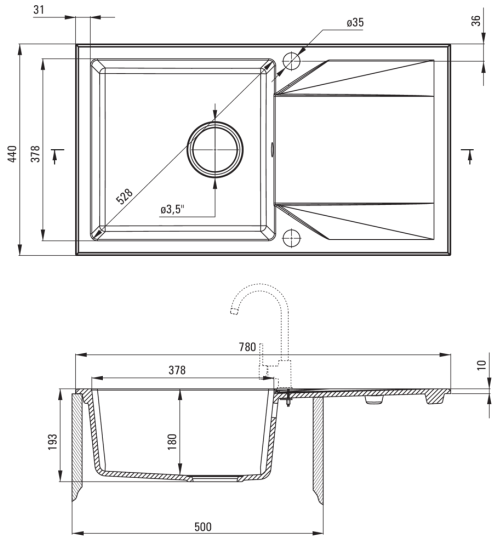

Sink

Finish	sand
Surface type	matte
Material	granite
Installation method	inset
Number of bowls	1
Minimum cabinet width [mm]	500
Width [mm]	440
Length [mm]	780
Height [mm]	193
Bowl depth [mm]	180
Cut-out length [mm]	760
Cut-out width [mm]	420
Reversible	Yes
Equipped with accessories	Yes
Number of holes	2
Number of pre-drilled holes	0

Sink waste kit

Finish	steel
Plug type	automatic
Low siphon/ space saver	Yes
Possibility to connect a dishwasher/ washing machine	Yes

Features:

- Properties of Deante granite: resistance to impact, high temperature, discoloration, thermal shock
- Longest, 18 years warranty
- The sink is equipped with fittings with a connection to the dishwasher
- Accessories with automatic shut-off of the drain
- Hydrophobic properties repel water molecules
- Reversible sink - possibility to install the bowl on the left or the right side
- Dedicated cleaning agent, safe for cleaned surfaces
- Space-saving siphon which facilitates e.g. sorting waste
- The finish enriched with silver ions adds antiseptic properties