**EVORA**

# Granite sink with tap, 1-bowl with drainer

**Product code:** ZQJJN113
**EAN:** 5907650819493
**Color:** nero
**Warranty [years]:** 18

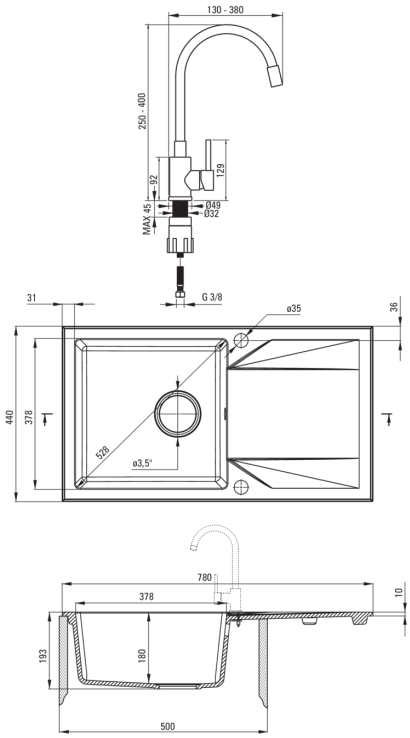


### Sink

| | |
|---|---|
| Finish | nero |
| Surface type | matte |
| Material | granite |
| Installation method | inset |
| Number of bowls | 1 |
| Minimum cabinet width [mm] | 500 |
| Width [mm] | 440 |
| Length [mm] | 780 |
| Height [mm] | 193 |
| Bowl depth [mm] | 180 |
| Cut-out length [mm] | 760 |
| Cut-out width [mm] | 420 |
| Reversible | Yes |
| Equipped with accessories | Yes |
| Number of holes | 2 |
| Number of pre-drilled holes | 0 |
| Hydrophobicity | Yes |

### Sink waste kit

| | |
|---|---|
| Finish | nero |
| Plug type | automatic |
| Low siphon/ space saver | Yes |
| Possibility to connect a dishwasher/ washing machine | Yes |

### Mixer

| | |
|---|---|
| Finish | nero |
| Mixer type | single-handle, mixer |
| Installation method | standing |
| Acoustic group [db] | I (x ≤ 20) |

### Mixer cartridge

| | |
|---|---|
| Ceramic cartridge size | 35 mm |

### Spout

| | |
|---|---|
| Spout type | elastic |
| Mixer spout range [mm] | 380 |

### Aerator

| | |
|---|---|
| Aerator type | honeycomb |
| Aerator size | M22 |

### Connecting hose

| | |
|---|---|
| Length [mm] | 350 |
| Installation thread | 3/8" |
| Connection thread | M10 |