ERIDAN

Granite sink, 1.5-bowl

Product code: ZQE_S503
EAN: 5908212097847
Color: metallic grey
Warranty [years]: 18

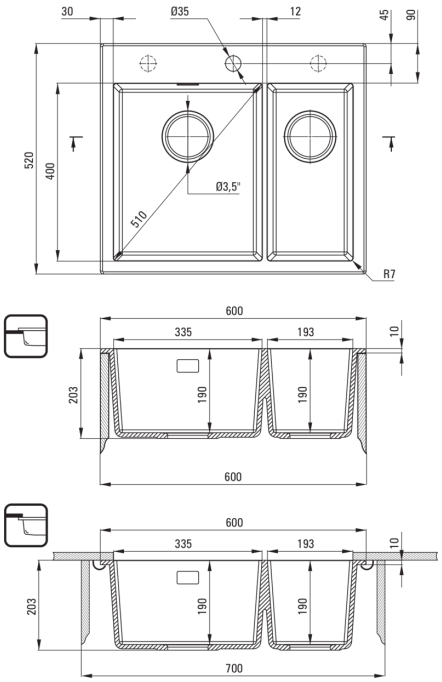

Sink

Finish	metallic grey
Surface type	matte
Material	granite
Installation method	inset, under mounted
Minimum cabinet width [mm]	600
Width [mm]	520
Length [mm]	600
Height [mm]	203
Bowl depth [mm]	190
2nd bowl depth [mm]	190
Cut-out length [mm]	580
Cut-out width [mm]	500
Cut-out length [mm]	540
Cut-out width [mm]	400
Equipped with accessories	Yes
Number of holes	1
Number of pre-drilled holes	2

Sink waste kit

Finish	steel
Plug type	automatic, with a button
Low siphon/ space saver	Yes
Possibility to connect a dishwasher/ washing machine	Yes

Features:

- Properties of Deante granite: resistance to impact, high temperature, discoloration, thermal shock
- Longest, 18 years warranty
- The sink is equipped with fittings with a connection to the dishwasher
- Hydrophobic properties repel water molecules
- Additional multi-functional small compartment - e.g. for rinsing vegetables and fruits or connecting a grinder
- Possibility to buy a sponge hook that fits perfectly with this model.
- Possibility to buy a cloth rail that fits perfectly with this model
- Additional milled holes for mounting a dispenser or other accessories
- Dedicated cleaning agent, safe for cleaned surfaces
- Space-saving siphon which facilitates e.g. sorting waste
- The finish enriched with silver ions adds antiseptic properties
- Automatic plug activated with a CLICK button