LUMI

Ceramic sink, 1.5-bowl

Product code: ZCU_6503
EAN: 5907650882978
Color: white
Warranty [years]: 2

Sink

Material	ceramic
Graphics	white
Length [mm]	555
Width [mm]	430
Height [mm]	220
Minimum cabinet width [mm]	600
Installation method	inset, under mounted

Features:
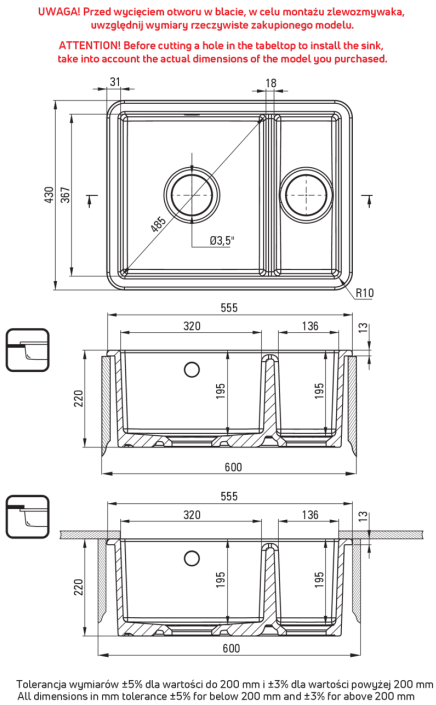
- ATTENTION! Before cutting a hole in the tabletop to install the sink, take into account the actual dimensions of the model you purchased.
- Hard and durable ceramics does not lose its properties with long use
- The sink is equipped with fittings with a connection to the dishwasher
- Dedicated cleaning agent, safe for cleaned surfaces