BORO

Shower column, 3-function

Product code: NER_N1RK
EAN: 5908212097663
Color: nero
Warranty [years]: 5

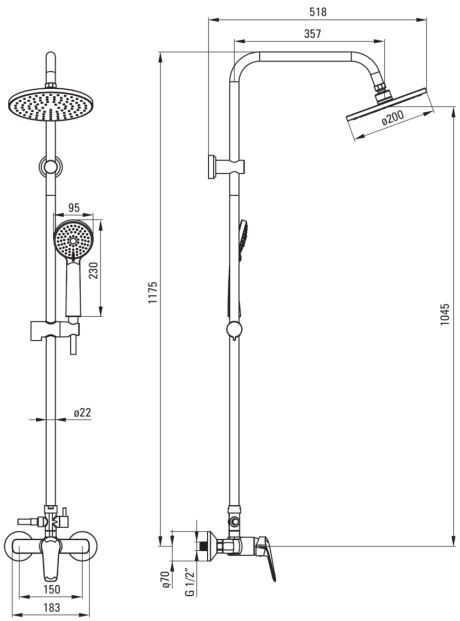

Shower column

Finish	nero
Mixer	Yes

Rail

Adjustable spacing	Yes
Material	stainless steel

Shower overhead

Shape	round
Material	ABS
Diameter [mm]	200
Anti-calc	Yes
Number of functions	1
Stream type	rain

Hand shower

Number of functions	3
Anti-calc	Yes
Stream type	rain, hydromassage, mixed

Hose

Length [mm]	1500
Braid type	not applicable
Braid material	PVC

Mixer

Mixer type	single-handle, mixer

Features:

- Innovative, durable and easy to clean Nero coating
- Dedicated cleaning agent, safe for cleaned surfaces
- Z flow class (4-9 l/min) allowing for water consumption reduction
- Adjustable spacing of the fasteners, for easy bar installation on existing holes
- Anti-calc hand shower
- Anti-calc system facilitating the removal of limescale deposits