JOKO SQUARE
Shower column, 1-function

Product code: NBJ_01SK
EAN: 5908212062777
Color: chrome
Warranty [years]: 2

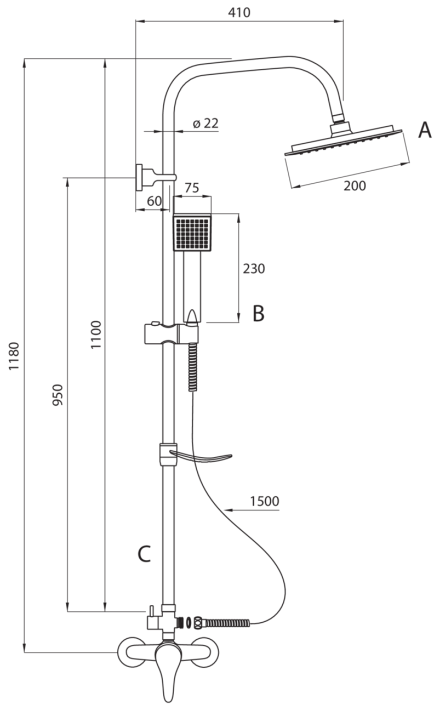

Shower column	
Finish	chrome
Mixer	Yes
Rail	
Adjustable spacing	Yes
Material	stainless steel
Shower overhead	
Shape	square
Material	ABS
Width [mm]	200
Length [mm]	200
Anti-calc	Yes
Number of functions	1
Hand shower	
Number of functions	1
Anti-calc	Yes
Stream type	rain
Hose	
Length [mm]	1500
Braid type	double braided
Braid material	stainless steel
Function switch	
Switch type	mechanical
Mixer	
Mixer type	single-handle, mixer

Features:

- Adjustable spacing of the fasteners, for easy bar installation on existing holes
- The hand shower with Anti-calc system facilitates the removal of limescale
- Dedicated cleaning agent, safe for cleaned surfaces