JASMIN

Concealed shower set

Product code: NAC_N9JP
EAN: 5907650874089
Color: nero
Warranty [years]: 7

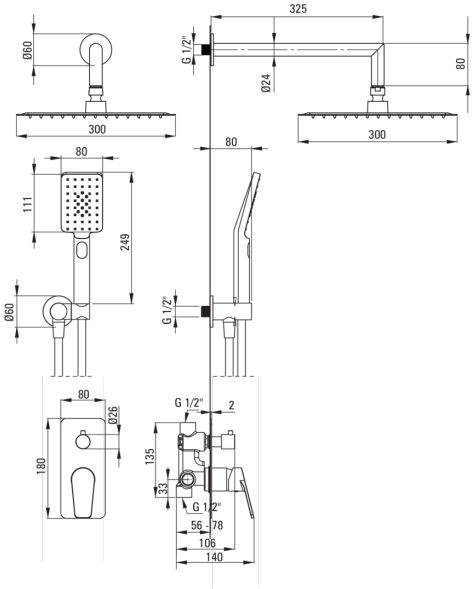

Mixer

Mixer type	single-handle, mixer
Installation method	concealed
Acoustic group [db]	I (x ≤ 20)

Spout

Spout type	still
Range of shower/ bath spout [mm]	325

Shower overhead

Shape	square
Material	steel 304
Width [mm]	300
Length [mm]	300
Thickness	55
Anti-calc	Yes
Number of functions	1
Stream type	rain
Quick response time for turning the water on and off	Yes

Hand shower

Number of functions	3
Anti-calc	Yes
Stream type	rain, mist, mixed

Hose

Length [mm]	1500
Braid type	not applicable
Braid material	PVC
Anti-twist	1

Angled hose connector

Finish	nero
Connection type	for the hose with hand shower holder
Shape	round
Material	brass
Connection thread	Yes
Concealed mounting	Yes

Features:

- Only the best materials, the quality of which has been confirmed by laboratory tests
- Innovative, durable and easy to clean Nero coating
- Dedicated cleaning agent, safe for cleaned surfaces
- Anti-calc system facilitating the removal of limescale deposits
- Flush-mounted installation ensures the aesthetics of the bathroom
- The mixer body is made of the highest quality brass