ALPINIA

Concealed shower set

Product code: NAC_N9ER
EAN: 5907650887034
Color: nero
Warranty [years]: 2

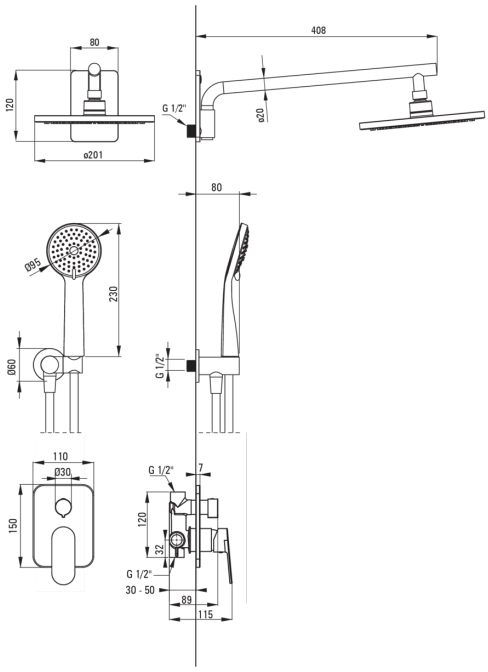

Mixer

Mixer type	single-handle, mixer
Installation method	concealed
Acoustic group [db]	II (20 < x ≤ 30)

Spout

Range of shower/ bath spout [mm]	384

Shower overhead

Shape	round
Material	ABS
Diameter [mm]	201
Anti-calc	Yes
Number of functions	1
Stream type	rain

Hand shower

Number of functions	3
Anti-calc	Yes
Stream type	rain, hydromassage, mixed

Hose

Length [mm]	1500
Braid material	PVC

Angled hose connector

Finish	nero
Connection type	for the hose with hand shower holder
Shape	round
Material	brass
Connection thread	Yes
Concealed mounting	Yes

Features:

- Light and subtle design
- Innovative, durable and easy to clean Nero coating
- Adjustable shower hand angle
- Anti-calc system facilitating the removal of limescale deposits
- 3-function hand shower
- Flush-mounted installation ensures the aesthetics of the bathroom
- Cleaning agent for fixtures in all colors available
- Only the best materials, the quality of which has been confirmed by laboratory tests