AGAWA

Shower column, with shower mixer

Product code: NAC_01QG
EAN: 5908212083758
Color: chrome
Warranty [years]: 5

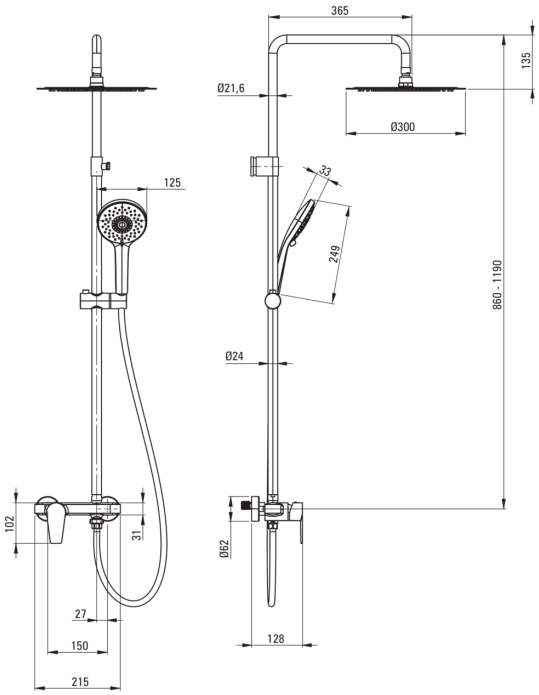

Shower column

Finish	chrome
Mixer	Yes
Rain head height adjustment	Yes
Bar height adjustment from [mm]	860
Bar height adjustment up to [mm]	1190

Rail

Material	steel 304
Additional features	adjustable shower head angle

Shower overhead

Shape	round
Material	steel 304
Thickness	55
Diameter [mm]	300
Anti-calc	Yes
Number of functions	1
Stream type	rain
Quick response time for turning the water on and off	Yes

Hand shower

Number of functions	3
Anti-calc	Yes
Stream type	rain, mixed, hydromassage

Hose

Length [mm]	1500
Braid type	not applicable
Braid material	PVC
Anti-twist	1

Function switch

Switch type	ceramic mechanical

Mixer

Mixer type	mixer, single-handle

Features:

- Steel bar
- Only the best materials, the quality of which has been confirmed by laboratory tests
- 3-function hand shower
- Asymmetrically located, adjustable bar
- Unique design
- Big hand shower
- Adjustable shower hand angle
- Rotational, mechanical function switch
- Steel shower head
- Dedicated cleaning agent, safe for cleaned surfaces
- Anti-calc system facilitating the removal of limescale deposits
- Adjustable rain shower height
- The mixer body is made of the highest quality brass