JASMIN PLUS
Shower cabin, half round

Product code: KTJ_052P
EAN: 5907650878995
Color: chrome
Warranty [years]: 2

Showe cabin

Shape	half round
Width [mm]	800
Length [mm]	800
Height [mm]	1900
Glass thickness [mm]	5
Glass finish	transparent
Active cover	Yes

Features:

- Hydrophobic Active-Cover coating that makes it easier for water to run off the glass
- Bottom rollers allow for the door detachment and easier product care
- Dedicated to Active Cover surfaces
- Safe and durable tempered glass
- Resistance to impacts, chemicals and stains in accordance with PN-EN 14428+A1:2008 norm, confirmed by tests of the Institute of Ceramics and Building Materials
- Possibility to install the cabin without a shower tray, directly on the tiles
- Dedicated cleaning agent, safe for cleaned surfaces
- Only the best materials, the quality of which has been confirmed by laboratory tests
- Covering of assembly elements
- Profiles leveling the curvature of the walls

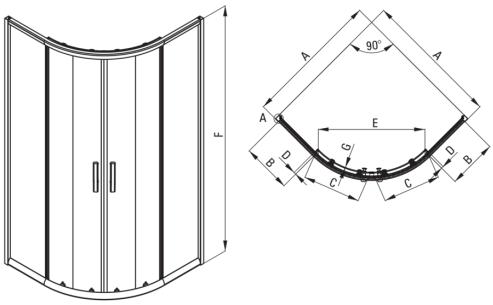

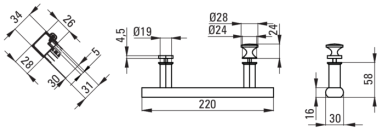

Model	Size	A (mm)	B (mm)	C (mm)	D (mm)	E (mm)	F (mm)	G (mm)
KTJ 052P	800x800	785 - 795	260	348	13	435	1900	5
KTJ 051P	900x900	885 - 895	322	380	16	520	1900	5