ARNIKA

Concealed shower set, with mixer BOX

Product code: BXYWNQAM
EAN: 5907650859635
Color: nero
Warranty [years]: 7

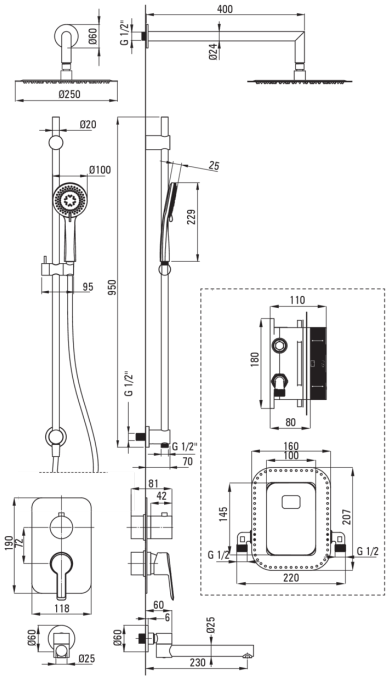

Mixer

Mixer type	Concealed BOX, mixer
Installation method	concealed
Acoustic group [db]	I (x ≤ 20)

Spout

Spout type	foldable
Range of shower/ bath spout [mm]	230

Shower overhead

Shape	round
Material	steel 304
Thickness	4.5
Diameter [mm]	250
Anti-calc	Yes
Stream type	rain
Quick response time for turning the water on and off	Yes

Hand shower

Number of functions	3
Anti-calc	Yes
Stream type	rain, mixed, hydromassage

Hose

Length [mm]	1500
Braid type	not applicable
Braid material	PVC
Anti-twist	2

Features:

- The variety of colours gives many arrangement possibilities
- Design full of beauty and harmony
- Innovative, durable and easy to clean Nero coating
- Only the best materials, the quality of which has been confirmed by laboratory tests
- Timelessness and unlimited creative possibilities
- Complementarity and comprehensiveness of the offer
- Flush-mounted installation ensures the aesthetics of the bathroom
- Anti-calc system facilitating the removal of limescale deposits
- Anti-twist system, preventing the hose from twisting
- Anti-calc hand shower
- Steel bar
- The set includes an additional washbasin aerator
- Foldable spout increase comfort and safety of use
- Ultra thin steel head
- Dedicated cleaning agent, safe for cleaned surfaces