ERIDAN

Kitchen tap, with water filter connection

Product code: BRE_075M
EAN: 5907650864035
Color: chrome
Warranty [years]: 7

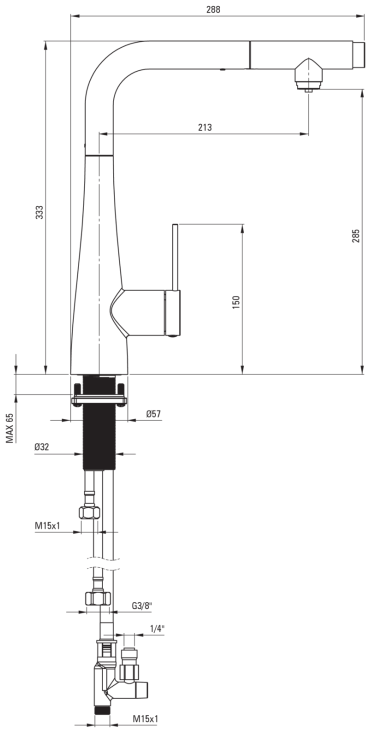

Mixer	
Finish	chrome
Material	steel 304
Mixer type	single-handle, mixer, for the water filter connection
Installation method	standing
Flow class [l/min]	Z - 4-9 l/min
Acoustic group [db]	I (x ≤ 20)
Mixer cartridge	
Ceramic cartridge size	35 mm
Spout	
Spout type	pull-out
Material	steel 304
Aerator	
Aerator type	honeycomb
Aerator size	M24
Connecting hose	
Length [mm]	600
Installation thread	3/8"
Hose	
Length [mm]	1500

Features:

- Z flow class (4-9 l/min) allowing for water consumption reduction
- 45 cm connection hoses included
- The mounting sleeve facilitates the installation of the mixer
- The mixer with functional pull-out spout
- The mixer is equipped with a stream aerator
- The tap can be mounted even very close to the wall
- Pull-out spout for filtered water
- Only the best materials, the quality of which has been confirmed by laboratory tests
- Cleaning agent for fixtures in all colors available