CORDA

Kitchen tap

Product code: BRC_F72M
EAN: 5907650863991
Color: brushed steel
Warranty [years]: 7

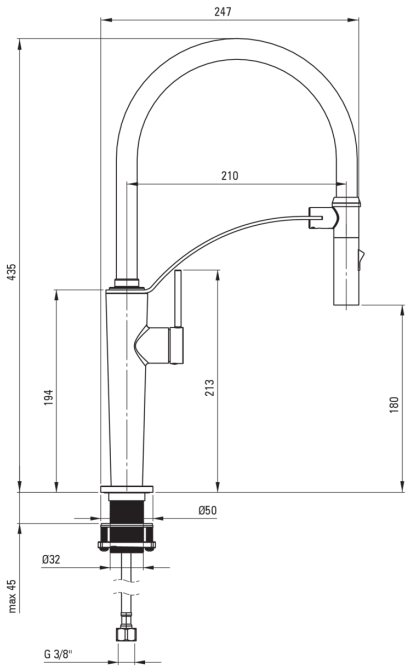

Mixer

Finish	steel
Material	steel 304
Mixer type	single-handle, mixer
Installation method	standing
Flow class [l/min]	Z - 4-9 l/min
Acoustic group [db]	I (x ≤ 20)

Mixer cartridge

Ceramic cartridge size	25 mm

Spout

Spout type	elastic
Material	silicone

Aerator

Aerator type	honeycomb
Aerator size	M15

Connecting hose

Length [mm]	600
Installation thread	3/8"
Connection thread	M8

Hand shower

Number of functions	2

Features:

- The mixer is equipped with a stream aerator
- Z flow class (4-9 l/min) allowing for water consumption reduction
- The mounting sleeve facilitates the installation of the mixer
- Magnetic spout holder
- 45 cm connection hoses included
- 2-function spout
- Dedicated cleaning agent, safe for cleaned surfaces
- Innovative and easy to maintain brushed steel coating