SILIA

Bath mixer, 4-hole

Product code: BQS_N18P
EAN: 5907650826996
Color: nero
Warranty [years]: 7

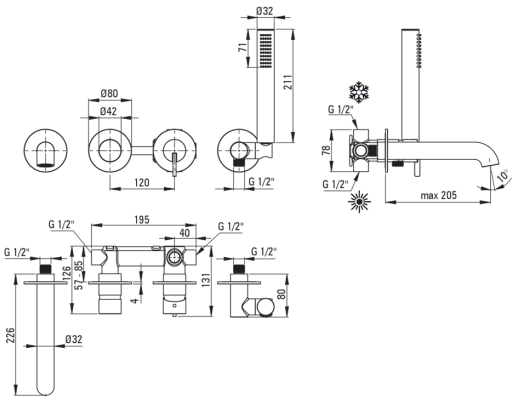

Mixer	
Finish	nero
Material	brass
Mixer type	single-handle, mixer
Installation method	concealed
Acoustic group [db]	I (x ≤ 20)
Mixer cartridge	
Ceramic cartridge size	35 mm
Spout	
Spout type	still
Material	brass
Function switch	
Switch type	click mechanical
Aerator	
Aerator type	flat, swivel, silicone
Aerator size	M24
Hose	
Length [mm]	1500
Braid type	not applicable
Anti-twist	1
Hand shower	
Number of functions	1
Anti-calc	Yes
Additional features	cool-out

Features:

- Noble form and timeless simplicity
- Mechanical ceramic Click type function switch
- Innovative, durable and easy to clean Nero coating
- The mixer body is made of the highest quality brass
- Flush-mounted installation ensures the aesthetics of the bathroom
- Adjustable shower hand angle
- Anti-calc hand shower
- Anti-twist system, preventing the hose from twisting
- Durable hose ends made of brass
- Only the best materials, the quality of which has been confirmed by laboratory tests
- Silicone aerator for easy limescale removal
- Cool-out hand shower
- Cleaning agent for fixtures in all colors available