ARNIKA

Bath mixer, 3-hole

Product code: BQA_D13M
EAN: 5907650828037
Color: titanium
Warranty [years]: 7

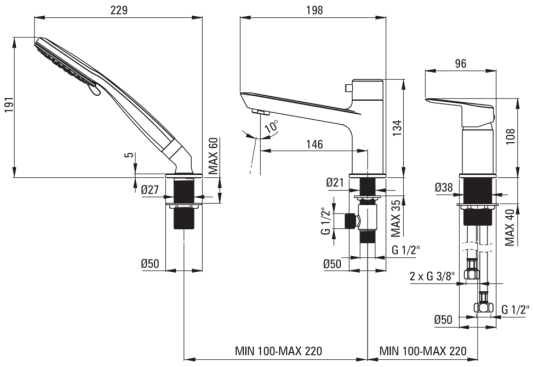

Mixer	
Finish	titanium
Material	brass
Mixer type	single-handle, mixer
Installation method	standing
Acoustic group [db]	I (x ≤ 20)
Mixer cartridge	
Ceramic cartridge size	35 mm
Spout	
Spout type	still
Mixer spout range [mm]	146
Material	brass
Function switch	
Switch type	ceramic mechanical
Aerator	
Aerator type	silicone
Aerator size	M24
Connecting hose	
Length [mm]	450
Installation thread	3/8"
Connection thread	M12
Hand shower	
Number of functions	3
Anti-calc	Yes

Features:

- Design full of beauty and harmony
- The variety of colours gives many arrangement possibilities
- Silicone aerator for easy limescale removal
- The mounting sleeve facilitates the installation of the mixer
- 45 cm connection hoses included
- Innovative, durable and easy to clean Titanium coating
- The offer includes a cleaning agent for fixtures in all colors
- Click-type function switch