ALPINIA

Washbasin tap, concealed

Product code: BGA_055L
EAN: 5907650845690
Color: chrome
Warranty [years]: 7

Mixer

Finish	chrome
Material	brass
Mixer type	single-handle, mixer
Installation method	concealed
Flow class [l/min]	Z - 4-9 l/min
Acoustic group [db]	II (20 < x ≤ 30)

Mixer cartridge

Ceramic cartridge size	35 mm

Spout

Mixer spout range [mm]	153
Material	brass

Aerator

Aerator type	honeycomb
Aerator size	M24

Features:
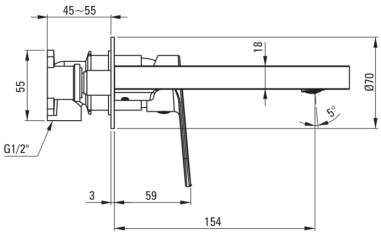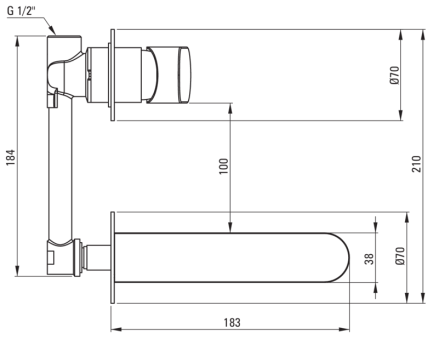
- Light and subtle design
- The mixer body is made of the highest quality brass
- Z flow class (4-9 l/min) allowing for water consumption reduction
- Flush-mounted installation ensures the aesthetics of the bathroom
- The mixer is equipped with a stream aerator
- Only the best materials, the quality of which has been confirmed by laboratory tests
- The offer includes a cleaning agent for fixtures in all colors