MILIN

Kitchen tap

Product code: BEU_B62M
EAN: 5908212039151
Color: nero
Warranty [years]: 7

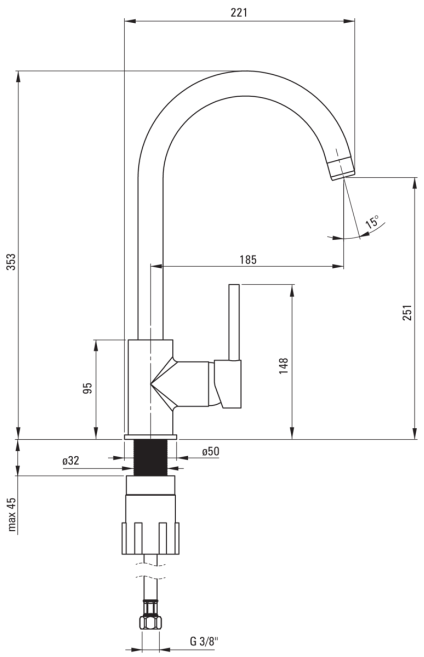

Mixer

Finish	black
Material	brass
Mixer type	single-handle, mixer
Installation method	standing
Flow class [l/min]	Z - 4-9 l/min
Acoustic group [db]	I (x ≤ 20)

Mixer cartridge

Ceramic cartridge size	35 mm

Spout

Spout type	swivel
Mixer spout range [mm]	185
Material	stainless steel

Aerator

Aerator type	honeycomb
Aerator size	M22

Connecting hose

Length [mm]	450
Installation thread	3/8"
Connection thread	M10

Features:

- The mixer body is made of the highest quality brass
- The mixer is equipped with a stream aerator
- The mounting sleeve facilitates the installation of the mixer
- 45 cm connection hoses included
- Z flow class (4-9 l/min) allowing for water consumption reduction
- Only the best materials, the quality of which has been confirmed by laboratory tests
- Cleaning agent for fixtures in all colors available