SILIA

Toilet brush, wall-mounted

Product code: ADI_D711
EAN: 5907650816973
Color: titanium
Warranty [years]: 2

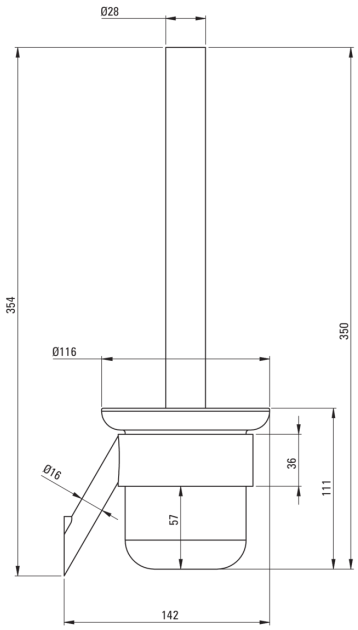

Bathroom accessories

Material	brass
Height [mm]	354
Width [mm]	116
Depth [mm]	142

Features:

- Modern design
- Concealed mounting
- High quality material
- Dedicated cleaning agent, safe for cleaned surfaces
- Only the best materials, the quality of which has been confirmed by laboratory tests
- Innovative, durable and easy to clean Titanium coating