ARNIKA

Toilet brush, wall-mounted

Product code: ADA_0711
EAN: 5907650858669
Color: chrome
Warranty [years]: 2

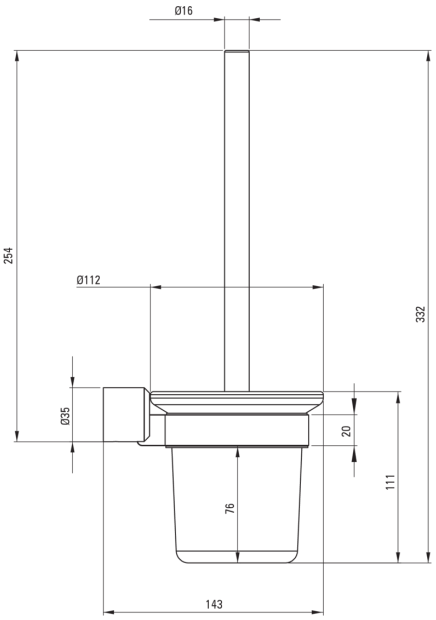

Bathroom accessories

Material	steel 304
Height [mm]	332
Width [mm]	112

Features:

- Design full of beauty and harmony
- The variety of colours gives many arrangement possibilities
- Only the best materials, the quality of which has been confirmed by laboratory tests
- The offer includes a cleaning agent for fixtures in all colors